Batttery Input

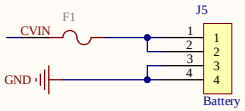

IIC Power Monitor

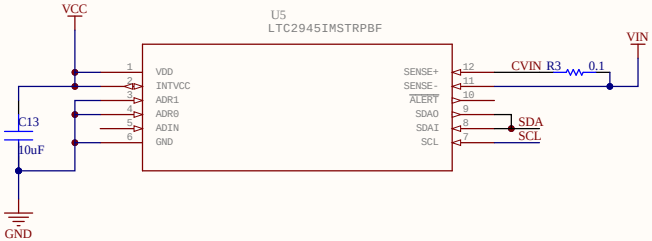

Antenna

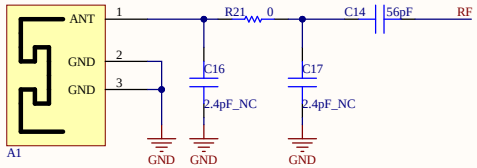

Connector

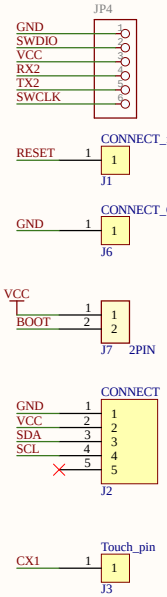

DC-DC

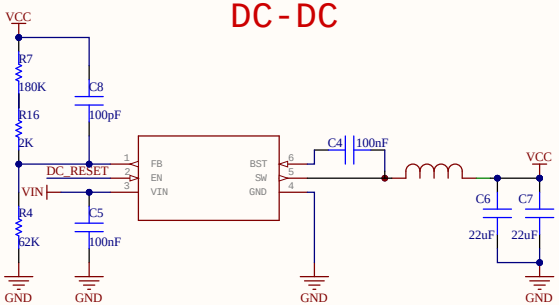

RAK3172

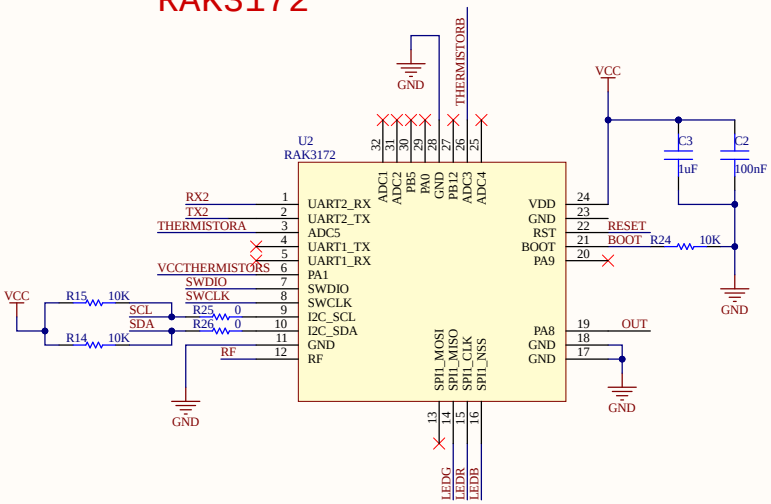

Low Current Supervisor IC

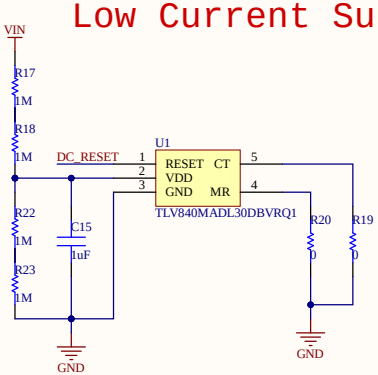

Hole

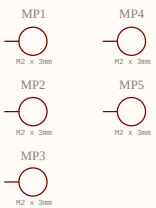

Touch IC

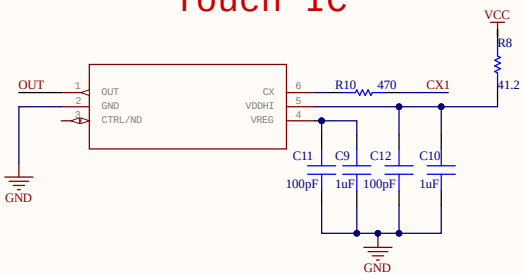

NTC

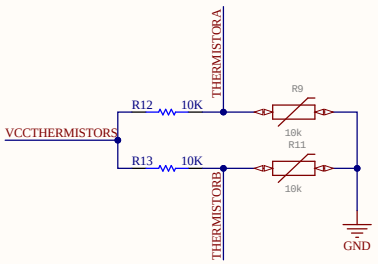

LED

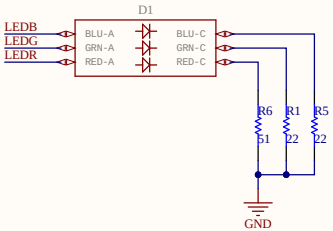

RESET

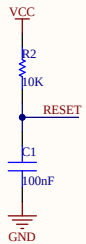

Title	*NO.1*
Engineer:	*Cecily*
Size: A3	Revision: 1.0
Date: 2026/4/21	Sheet 1 of 1

RAK wireless Technology Co., Ltd.